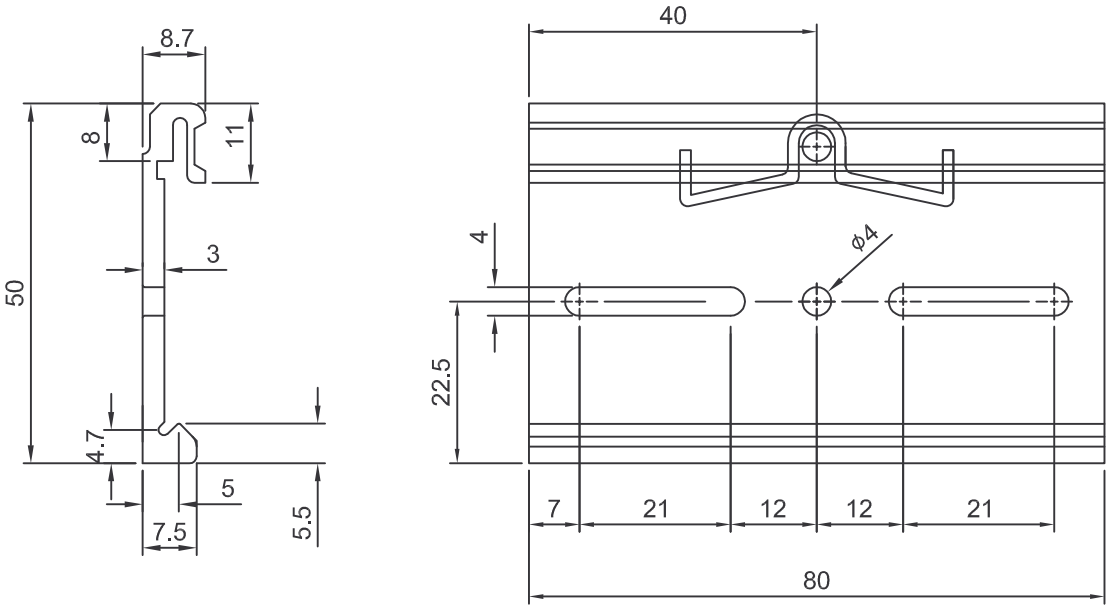

MEAN WELL	MATERIAL: Al. 6063-T5 材質:鋁	DWG NAME: Mounting Accessories 圖號: 機構配件圖	ORDER NO.: DRP-02 品號
	FINISH: Degreasing Cleaning Fluid 處理: 脫脂洗清	THICKNESS: 厚度	DATE: 2005-10-17 日期
	UNIT: mm 單位	TOL.: Angle:±1° 公差 <6:±0.1mm 6 to 30:±0.2mm 30 to 120:±0.3mm 120 to 315:±0.5mm	REV. R2 版本

Note: all features are subject to change without notice.
Costruzioni Elettroniche Elettromeccaniche & Affini s.r.l. - 10132 TORINO - C.so Casale, 413 - Tel. 0118987106 / 0115534597 - fax 0115534597 - e_mail cea@cea.to - URL http://www.cea.to