S410-R range

Revision: 8R17.10.02
Sheet: B-410-00

FEATURES

Input voltage
115/230Vac ±15%
(jumper selectable on on pcb)
Input frequency
50/60Hz
Efficiency
75% typ. (depending on output voltage)
Switching operating frequency
50KHz ca.
Input protections
• Start-up peak current lim.: 30A at Vin=230Vac
• EMI filter
• Line fuses
Leakage current to GND
Max 2mA at 50Hz
See table for
• Output voltages and currents
• Line and load regulation
• Output ripple and noise
Output protections
• Overload protection
• Short circuit protection
• Overvoltage: at Vo + 25% typ.
Hold up time
15msec min.

Start up time
60msec typ.
Output power
390W (see table)
Remote sense compensation
• 0.5V max
Output signals
• Alarm relay contact (U.V.P)
Operating temperature
0°C to 50°C
Temperature power derating
2%/°C (50÷70°C)
Storage temperature
-20°C to 85°C
Temperature drift
0.01%/°C typ.
Long term stability
Better than 1% after 24 hours
Cooling
Natural convection
Control and adjustment
• Vadjust trimmer on front panel
Test points
Vout test-points on front panel

Operating indicators
• Led Vout OK on front panel
Dielectric withstand voltage
• Input - Output : 3750Vac (on insul.comp.)
• Input - P.E.: 1750Vac
Isolation
• Output - P.E.: 500Vdc
Comply with
• EN 50081-1
• EN 61000-6-2
• EN 60950
• CE
Weight
2200g
Optional features
• DC - DC input for AC-DC units
• DD - Output decoupl. diode for parallel connection
• I - Inhibit input ; inhibits all outputs
• PROG - Programmable Vout

FEATURES TABLE

MODEL	Output Power W	Vout Volts	Output voltage adj. Volts	Iout Ampere	Line regulation VIN(min÷max) %	Load regulation (10÷100%) %	Ripple & Noise (0÷30MHz) % Vout
S413R	384	12	10.5÷14	32	±0.1	±0.5	1
S414R	390	15	14÷17	26	±0.1	±0.5	1
S416R	384	24	20÷28	16	±0.1	±0.5	1
S417R	396	36	31÷42	11	±0.1	±0.5	1
S418R	384	48	41÷52	8	±0.1	±0.5	1
S419R	384	96	86÷110	4	±0.1	±0.5	1

S410-R VIEW

TEMP. POWER DERATING

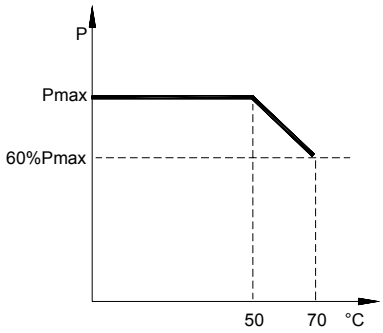

BLOCK DIAGRAM

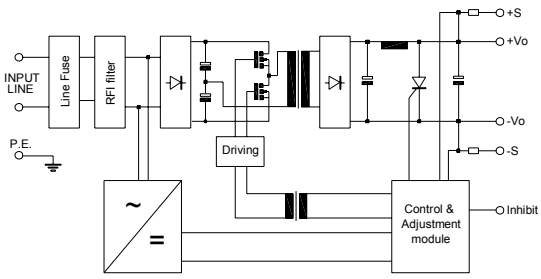

DIMENSIONS AND CONNECTIONS

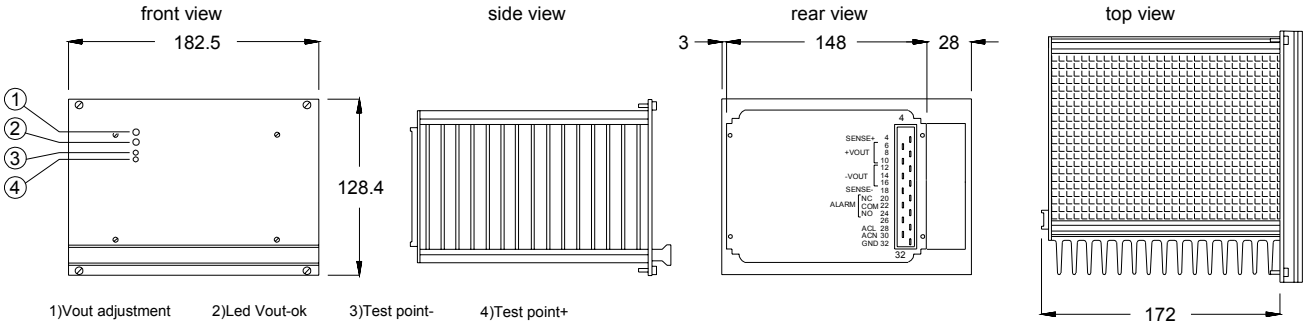

04)Sense+
06)Vout+
08)Vout+
10)Vout+
12)Vout-
14)Vout-
16)Vout-
18)Sense-
20)Relay N.C.
22)Relay Com
24)Relay N.O.
26)n.c.
28)ACinputL
30)ACinputN
32)P.E./Chassis

AZIENDA CERTIFICATA
GLOBE CERTIFICAZIONI
I918R/2006
UNI EN ISO 9001:2000

Note: all features are subject to change without notice.

Costruzioni Elettroniche Elettromeccaniche & Affini s.r.l. - 10132 TORINO - C.so Casale, 413 - Tel. 0118987106 / 0115534597 - fax 0115534597 - e_mail cea@cea.to - URL http://www.cea.to